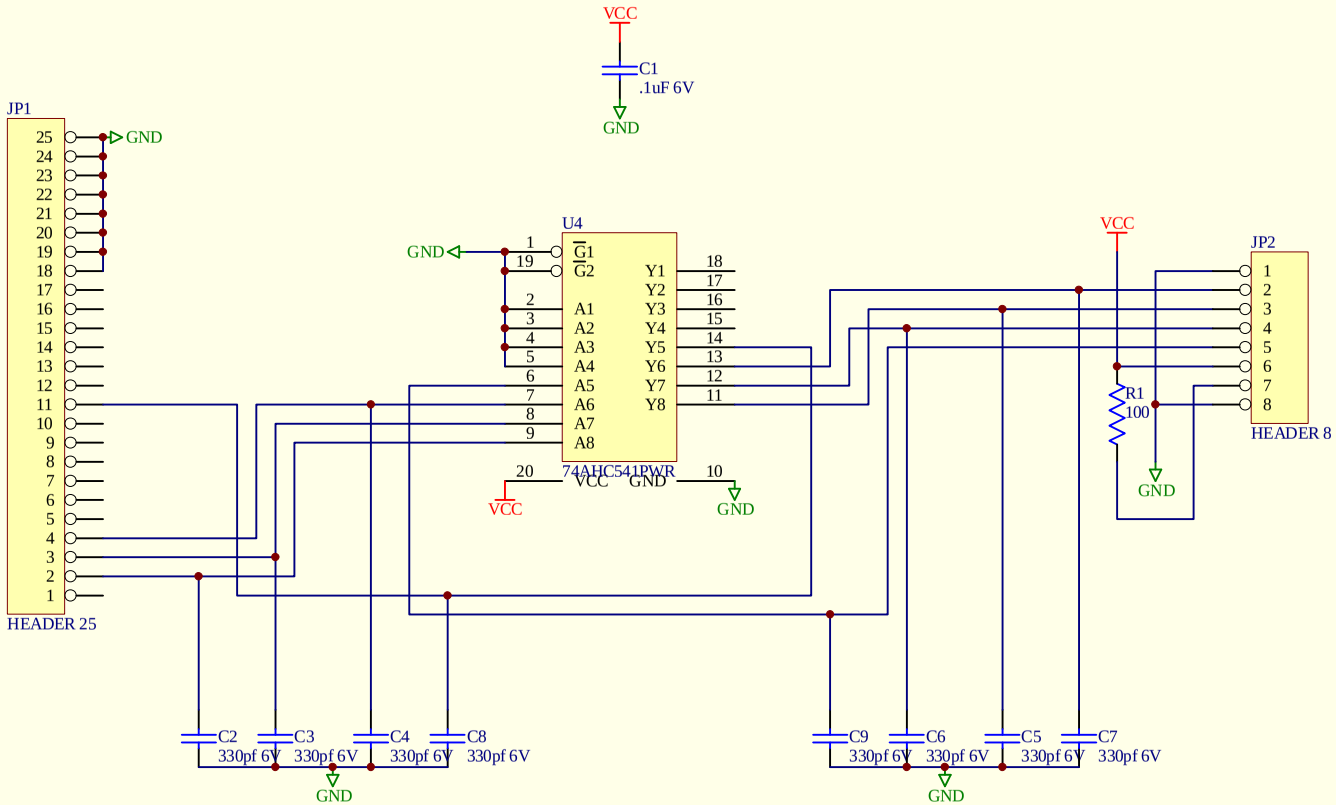

Revision History

Rev	Date	Whodunnit	What
X1	???	Holly Gates (E-Ink)	Original
X2	4-19-2001	Eric N. Johnson (ACD)	Added R1, 0805 passives, change C4 connection, GND unused inputs

Title: LART JTAG Adapter		
Size: A	Number	Revision: X2
Date: 11-May-2001		Sheet 1 of 1
File: C:\Projects\..\jtag-lart-acd.sch		Drawn By: Holly Gates